Last version online

[Qubes]

PRODUCT SHEET

20092025

OSCARONO

PARIS

SHAKE
THE
LINES

QUBES COLLECTION

BASIC ENDGRAIN FOUNDATION FOR GREAT PROJECTS

Qubes has been engineered because sometimes a project is on a budget-leash while the floor needs to offer all technical and aestethical advantages of endgrain.

Qubes is made of European oak endgrain that offers hardness, durability and improved acoustics.

We invite you to discover Qubes, an engineered endgrain flooring at democratic prices.

TABLE OF CONTENTS

05 A playground for creativity

07 Technical features

10 Installation guide

20 Cleaning & maintenance

23 25 year warranty

25 Documents for control agencies

27 Designed by Raphael Navot

A PLAYGROUND FOR CREATIVITY

FINISHES TO THE CORE NO COLORATION

The Qubes Collection comes in 3 different finishes, carefully selected for their performance. These finishes are natural, to the core and made without coloration.

TECHNICAL FEATURES

DIMENSIONS

Width of the board:	80 mm
Thickness of the board:	16 mm
Thickness toplayer	6 mm
Size oak blocks	80x80 mm
Length of the board	1138 mm
Sqm per board	0,091 m^2
Weight per sqm	12 kg

COLOR CODES

Unfinished	n/a
Natural	B202
Smoke	B203
Black	B204

FINISH

2 component invisible varnish

TIMBER SPECIE

European Oak / Quercus Petraea

CERTIFICATION COMPLIANCE

FSC/PEFC	On request
CE	EN 14342
VOC emissions	E1/ISO 16000
Fire resistance rating	Cfl-S1
Brinell hardness rating	3.7 (medium-hard wood: 2.5 to 3.8)
Thermal resistance	0.14 m2 K/W (depending on the installation surface)

USE

In- / outdoor	Indoor only
Area	Avoid high humidity areas, like a spa with direct contact with water
Traffic	High traffic area, residential and commercial (classification 33)

HS CODE

4409 2991 00

SPECS MIX GRADING

Grow defects:	35 mm
Healthy knots:	max. 35 mm/ in max. 1 pieces of board, filled
Sap wood:	max. 20 mm, stained
Water spots:	yes
Worm holes:	no
Dark color shades (brown core):	no
Drying stripes:	no
Cracks:	<10mm, filled
Rouge:	no

CONSTRUCTION

Plywood = Betula Pendula	10 mm - 100% Birch waterproof quality, D4 adhesives
Oak toplayer = Quercus Petraea	6 mm
Adhesive toplayer	1 component glue with ISO normation 17178.
Connection boards	(Loose) Tongue and groove system
Bevel	N/A
Oak Blocks	Round Gap approx 1 mm

GAPS

Gap size	<1 mm
Optional filling of the gaps	LignoFusion by OscarOno Paris (color brown for all Qubes Natural and Smoke versions, color black for all Qubes black versions)

NOTE: Optional filling of the gaps can easily be achieved on site by applying LignoFusion. A professional video tutorial can be seen here: https://youtu.be/**oDHL0PJCmuM**

CLIMATIC CONDITIONS

Wood products	8-12% moisture
Ideal indoor environment	40-60% humidity

PACKAGING

Max. palletsize	120x80x100 cm
Max. boards on a pallet	520 pcs
Max. m^2 on a pallet	40
Max. pallet weight	500 kg

INSTALLATION GUIDE

A. JOBSITE PREPARATION

CONDITIONING & UNPACKING

Choose your temporary storage wisely:
If the jobsite is not ready to receive the OscarOno materials and you are obliged to stock the materials in a temporary storage, make sure the storage conditions are as similar as possible to the ones at the jobsite, ideally climate controlled but that is not mandatory. Keep the packages unopened when stocked in a temporary storage.

Prepare the jobsite:
Before delivering the OscarOno materials to the jobsite, check if the jobsite is ready. The jobsite should be fully enclosed, with all doors and windows installed. Interior climate controls and/or floor heating systems should be running for at least 48 hours to stabilize moisture levels (**1**).

The OscarOno materials should not be delivered until all wet construction work (like painting or plastering) is finished.

Prepare the installation rooms:
Before delivering the OscarOno materials to the installation rooms, double check if the rooms are ready to receive the materials. Ensure that heating, air conditioning and humidity controls in the room are in full operation and working properly.

Acclimate the flooring:
Keep the packages with OscarOno materials unopened and store them in the rooms where they will be installed. This allows the flooring to adjust to the room's conditions.

The amount of time needed for acclimation can vary but a minimum of 48h is recommended. The installing contractor can decide different based on the current local weather and atmospheric conditions.

Maintain consistent temperature:
Make sure the room temperature is kept steady at no less than 18°C (65°F) from the time the OscarOno materials are delivered, through the acclimation period, during installation and until the installation is complete (**2**).

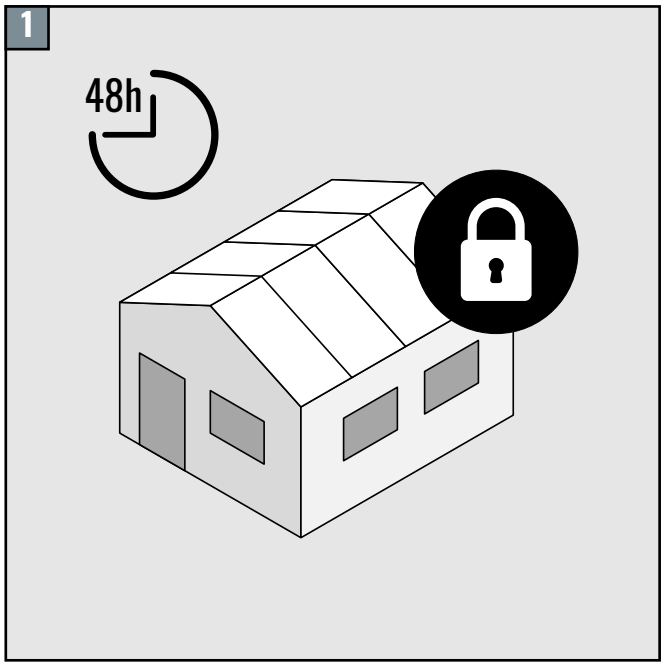

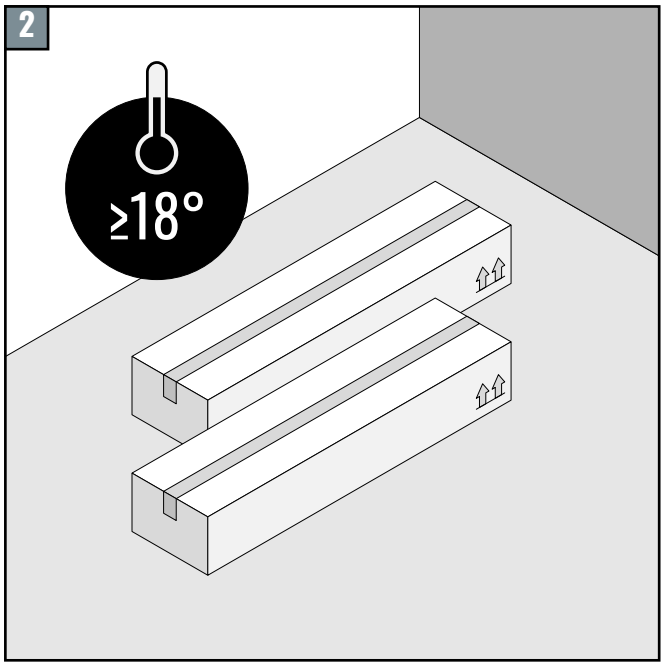

DID YOU KNOW?

Purpose of acclimation:
The main goal of acclimating OscarOno materials or any other wood materials is to let the materials adjust to the normal temperature and humidity of the room where they will be installed (**1**). This is especially important once the permanent heating, ventilation, and air conditioning (HVAC) system is functioning properly. The better wood materials are acclimated, the more stable behavior they will have throughout their lifespan.

Understanding moisture content:
If you know the Equilibrium Moisture Content (EMC) for wood in your area, the OscarOno materials may already be at the correct moisture level. In this case, extended acclimation might not be necessary.

The installing contractor should understand the EMC to decide how long acclimation should take (reminder: minimum of 48h is recommended). This means checking and recording the wood's moisture content when it arrives and knowing what the expected moisture content should be at equilibrium. The OscarOno materials are typically manufactured with a 7-9% EMC which ensures a perfect stability of the materials.

Equilibrium state (EMC):
When wood reaches equilibrium, its moisture content stabilizes and doesn't gain or lose water. This balance occurs when the wood's moisture matches the surrounding air's vapor pressure.

Humidity and temperature changes can cause both long-term and short-term fluctuations in the wood's moisture content. Protective coatings can slow these changes, but the wood will eventually reach equilibrium with its environment.

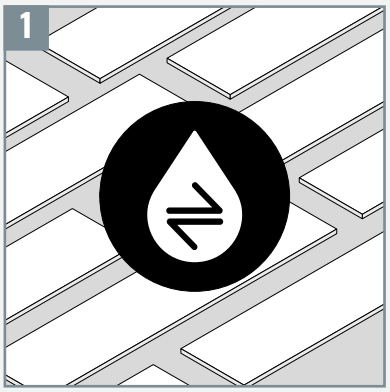

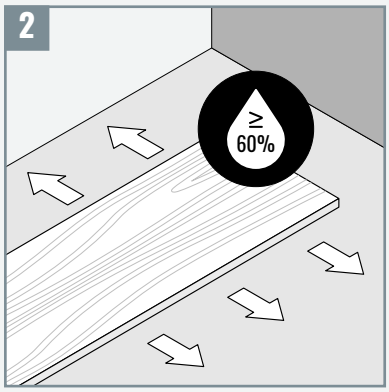

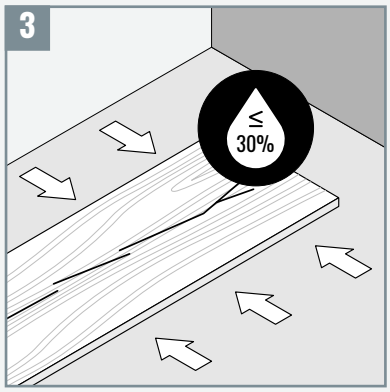

Humidity levels and effects:
High humidity (above 60-70%) at normal residential temperatures can cause the wood to expand, leading to an EMC of 12% or more. (e.g. installations near the sea) (**2**).

Low humidity (below 25-30%) can cause the wood to shrink, resulting in an EMC below 6%, which may cause cracks. (e.g. installation in the mountains) (**3**).

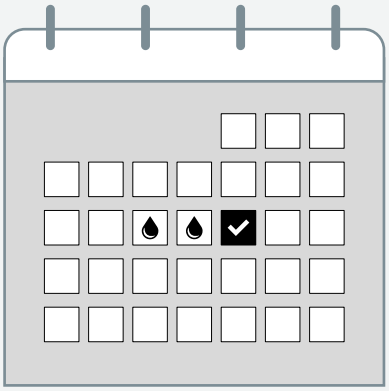

Ideal conditions:
Ideally, the OscarOno materials should be acclimated and installed in an environment with a relative humidity of 35-55%.

Generally, OscarOno materials or any wood products performs best in environments where humidity is kept between 30-50% and temperatures are between 16°C and 27°C (60°F to 80°F).

Acclimation recommendation:
We recommend at least 2 days of acclimation before installation. Never install plank flooring on the same day it is delivered.

B. SUBFLOOR PREPARATION

1. CONCRETE SUBFLOOR PREPARATION

Surface smoothness and leveling:
The concrete subfloor must be smooth and level. The surface should be flat and not have any deviations/anomalies greater than 5mm (3/16 inch) over a 3-meter (10-foot) straight edge in any direction (**1**).

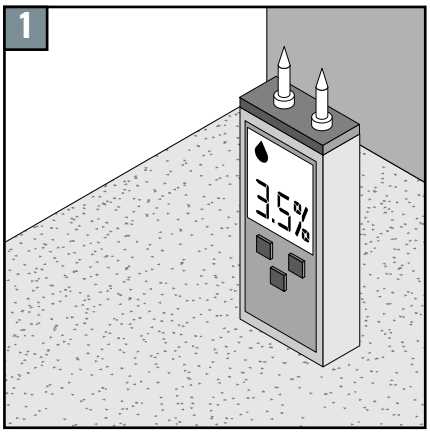

Use a straight metal strip to check the floor's level, paying special attention to edges and corners. Any irregularities, such as rough spots or gravel, should be ground smooth. Low areas should be filled with a leveling compound.

If the subfloor does not meet these specifications, the installing contractor should ask the general contractor to make the necessary corrections.

Moisture testing:
The concrete should be tested for moisture content. The moisture level should not exceed 1,4 KG (3 lbs.) per 92 m^2 (1,000 sq. ft.) per 24 hours according to ASTM F-1869 standards, or 75% relative humidity (RH) according to ASTM 2170 standards.

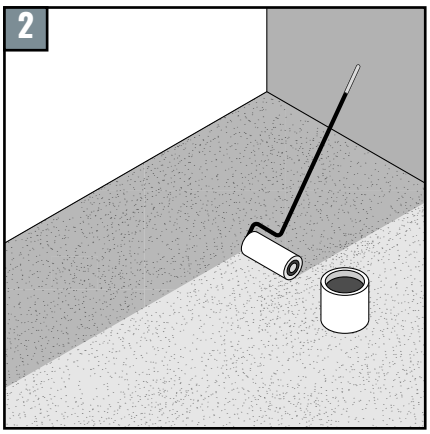

Bond test:
Before applying the adhesive and installing the OscarOno materials, perform a bond test. Use your chosen adhesive on a small area with several planks to ensure proper adhesion (**2**).

Contact us if you have any specific concerns or need advice on your particular conditions.

Recommendation of glue:
Polyurethane adhesive from a premium brand (f.ex. Sika, Bona, Vermeister). You may use both mono- or bi-component solutions.

Adhesives from premium brands are stable in composition and highly durable and resistant to moisture. They provide a strong and flexible bond, on a variety of subfloor types, making them ideal for areas with high foot traffic. In any case, always follow instructions from the brand you are using.

2. WOOD SUBFLOOR PREPARATION OR RAISED OFFICE FLOOR

Surface condition:
The wood subfloor should not have any hollow spots and any nails or fasteners sticking out. The surface must be smooth and even (**1**).

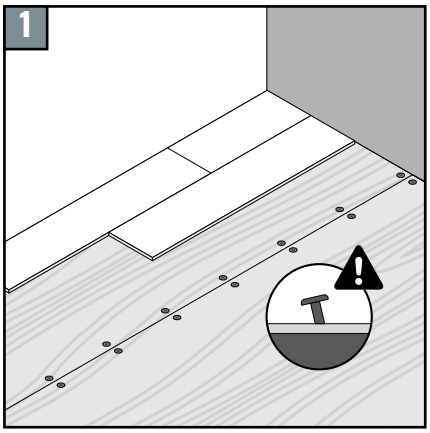

Installing on a raised office floor:
If you are installing the wood planks over a raised office floor system, you need to add an underlayer. Use a minimum of 12mm (½ inch) plywood or hardboard as the underlayer. This underlayer should be securely glued and screwed down to create a stable base for the wood flooring.

These steps ensure a solid, even surface for your wood flooring, preventing issues like uneven wear or damage over time.

C. RULES FOR INSTALLING WITH UNDERFLOOR HEATING (WATER AND ELECTRICAL)

OscarOno guarantees its materials to be compatible with underfloor heating systems, both water & electrical to a maximum of 28°C (82°F), enabling homes to remain comfortable whatever the weather conditions. However, specific rules must be followed.

SPECIFIC CONDITIONS AND RULES:

Install a fidbox:
OscarOno Paris advises to install a fidbox (https://www.fidbox.net/) to monitor factually all relevant data (temperature, relative humidity, etc) just below the surface of your floor. It's an inexpensive connected device that helps detecting any external problems and thus reducing risks of damages to the floor.

Avoid carpets on any floor heating system
Carpets block the heat emission, will limit the performance of the heating and therefore can create important malfunctions of the heating device and the wood floor.

Thickness of the concrete screed floor:
With water-based underfloor heating, the concrete or anhydrite floor above the heating pipes must be at least 30 mm thick.

Heating protocol:
Follow the prescribed heating protocol to achieve the correct moisture level in the screed floor. The screed floor must be at least 28 days old before turning on the underfloor heating. The moisture content of the concrete screed floor must not exceed 1,5% before installation. For anhydrite screeds, it should not be higher than 0,3%.

Acclimatizing the wood:
Allow the wooden floorboards to acclimatize in their unopened packaging in the installation room for at least 48 hours.

Central heating:
Turn off the central heating system two days before installing the floor. Ensure the room temperature remains at or above 18°C (64°F) during installation.

Adhesive recommendations:
It is mandatory to glue the flooring to the subfloor using a suitable water-free adhesive like the ones we advised in previous pages. Gluing the floor also enables a better thermal conductivity of your floor. Obviously, do never use any nails for installation when working with under-floor heating.

Starting the underfloor heating:
After installation, turn on the underfloor heating following the prescribed heating protocol:

- On the first day, set the temperature to 20°C (68°F).
- Increase the temperature by 5°C (41°F) every 24 hours.
- The system temperature must not exceed 45°C (113°F), and the floor temperature should not go above 28°C (82°F).

Reversible floor heating systems
These devices perform 2 functions, i.e. heating during wintertime but also a cooling function during summertime. During those summertimes, the device will act as a heat absorber with cool water in the pipes. The cooling underfloor is not an air conditioning system but rather a device that allows a certain level of comfort by cooling down the ambient temperature by 3 to 5°C. (37°F to 41°F)

It's important that the device is equipped with a sensor system which will regulate the tempature of the fluids to avoid a dewpoint (condensation) under the wood flooring that might damage the wood. As an additional protection OscarOno advises to apply a moisture barrier to the subfloor to absorb any possible malfunctions of the cooling system. Also a minimum temperature of 12°C (53°F) control of the fluid must be installed with the device.

D. BEFORE YOU START INSTALLING

1. CHECK THE SITE CONDITIONS AGAIN

Make sure the room meets all the conditions needed for a successful installation. This includes checking humidity levels and the condition of the subfloor.

Measure humidity:
Use a reliable tool like a hygrometer, sling psychrometer or an electronic device to check the humidity in the room where you will install the wooden floor (**1**).

Ideal humidity range:
The humidity level should be between 35-55%. The room temperature should be between 18°-25°C(65°-75°F).

Delay if necessary:
If the humidity is outside this range, do not start the installation. Wait until the humidity and temperature are within the normal range before proceeding.

This ensures the flooring will perform well and last after installation.

2. MIX THE OSCARONO MATERIALS:

To get a consistent look across the entire floor, it is advised to mix pieces from different boxes or pallets as you proceed to install. This helps avoiding noticeable patterns and gives the floor a more natural appearance (**2**).

3. INSPECT THE OSCARONO MATERIALS:

Before starting, open the boxes and lay out a few pieces of the OscarOno materials in the area where you plan to install them. This will help you see if the color, shine, and quality meet your expectations (**3**).

If you are not happy with how the OscarOno materials looks or if you suspect that there are issues with the quality, do not start the installation and contact OscarOno per immediate to get a confirmation to continue installation or not.

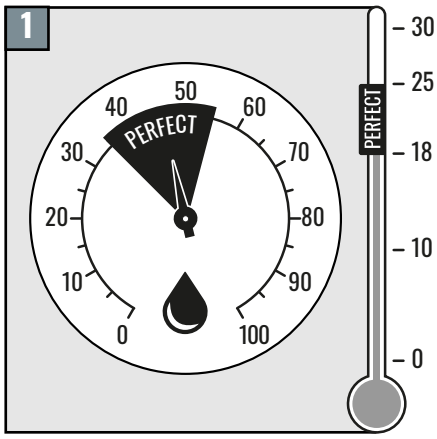

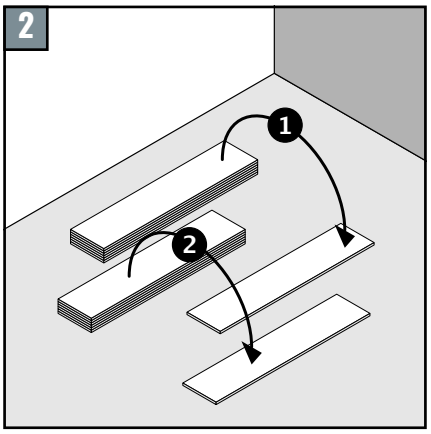

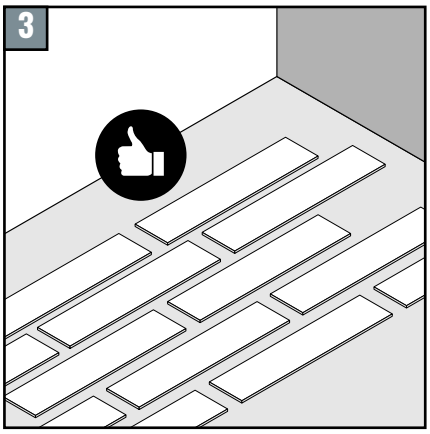

DID YOU KNOW?

Acceptance of materials:
Once you start to place the OscarOno materials onto the adhesive, you accept the material as is. So, it is important that you are satisfied with the material before you start applying the adhesive.

E. STARTING THE ACTUAL INSTALLATION

INSTALLATION

Choosing the direction:
OscarOno products can be installed in any direction and pattern. However, it is usually best to place the planks parallel to the main light source in the room for the best effect **(1)**.

You can also choose the direction based on the room's proportions to emphasize its shape.

Expansion joints in doorways and large areas:
In doorways or in rooms larger than 10 meters (33 feet) in length or width, you should install a cork expansion joint or another suitable material **(2)**.

Cover the expansion joint with a molding or cover strip. We recommend using a cork expansion joint that is 16mm (⅝ inch) in height and up to 25mm (1 inch) in width.

Always lay the boards lengthwise in narrow hallways.

For sound insulation and to smooth out minor subfloor irregularities, use 3mm (⅛ inch) cork sheets or rolls. Note that we do not recommend a "floating installation" method.

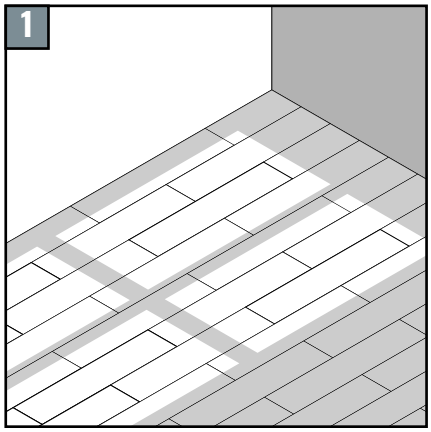

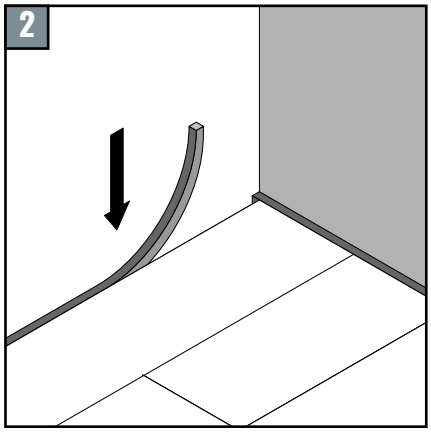

Nailing the flooring:

OscarOno products can be nailed directly onto solid, level, and well-ventilated wood or plywood sub-floors. Top nail and blind nail the first row. Use 25mm to 30mm (1 to 1½ inch) staples every 75-100mm (3 to 4 inches), or use 25mm to 30mm (1 to 1¼ inch) hardwood flooring cleats every 100-150mm (4 to 6 inches) (**1**).

For a more permanent installation, you can glue the flooring in place.

Starting the installation:

Begin in the right-hand corner of the room. Place the first board with distance spacers between the board and the wall, leaving a gap of 10mm to 15mm (⅜ inch to ½ inch). Position the groove side of the board towards the wall, leaving the tongue exposed for easy installation.

Laying the boards:

Start every other row with a half plank to stagger the joints. Use a hammer and tapping block to snugly fit the new planks over the exposed tongue. For the last board in the first row, measure it and remember to leave a 10mm to 15mm (⅜ inch to ½ inch) gap between the board ends and the wall (**2**).

Begin the second row with the leftover piece from the first row to reduce waste. Continue to join the boards row by row, working from right to left. Snap the boards together along the long side using a hammer and tapping block. Do not hammer directly on the flooring edge.

Finishing the installation:

After completing the installation, remove the distance spacers from all walls. Attach base molding to the wall, not to the flooring, to cover the expansion space. If you're not using base molding, consider filling the gap with pre-molded cork to maintain a clean finish (**3**).

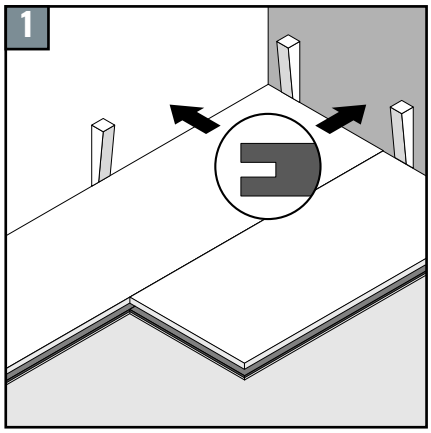

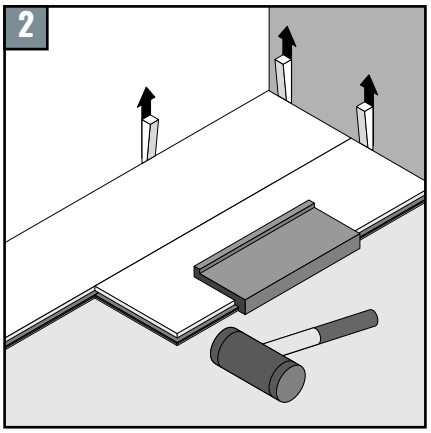

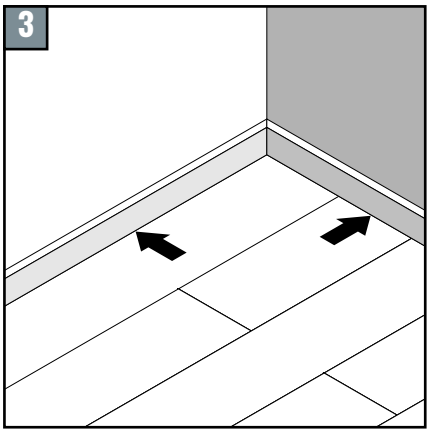

EXPANSION VOID

Create an expansion space:
Around the perimeter of the room, you should leave an expansion space of 20mm (¾ inch) between the wood flooring and the walls or any columns. This allows the wood to expand and contract with changes in temperature and humidity.

Using cork strips:
You can use cork strips ranging from 12mm (½ inch) to 38mm (1½ inches) wide against all walls and columns. These strips ensure that the expansion space is maintained and can be hidden with shoe moldings or other baseboards/plinths/skirting board if desired.

Temporary wooden strips:
Place temporary wooden strips along the walls and columns, ensuring they match the width of the desired expansion void (**1**).

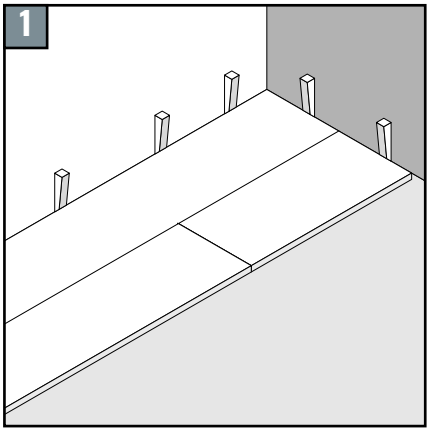

Install the wood planks flat against these strips. At the end of the day, remove the temporary strips, leaving a uniform space for expansion around the perimeter.

Aisleways and narrow areas:
In narrower spaces, like aisleways or where the wood flooring meets carpet or other types of flooring, you can omit the expansion void.

Use Schluter strips (metal or plastic edging) at the edges of the wood planks where they meet carpet or other flooring materials. This helps protect the edges and provides a clean transition between different floor types.

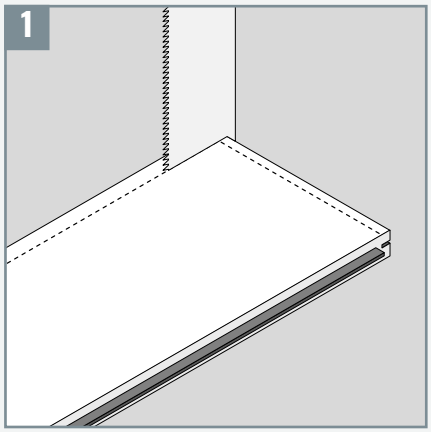

CAUTION

Handling the thin surface of engineered wood:
OscarOno engineered products have a thin surface layer of 8mm (5/16 inch) end grain wood. It is crucial that no voids are left beneath this surface during installation.

Installing against other flooring or Schluter strips:
When placing the plank against another flooring type or a Schluter strip, you need to ensure a tight fit. This often requires cutting off either the tongue or the groove from the plank (**1**).

The end grain and the plywood base it sits on, should fit tightly against the adjacent flooring or Schluter. If you leave a void by installing the tongue side against the Schluter, you must first fill the void with half of a wooden slip tongue.

Avoiding voids:
If any voids are left after installation, the edge of the end grain surface may crack and break away, leading to complex and difficult repairs. To prevent this, make sure the installation is tight and secure without gaps. If you are unsure about this process, please contact us before beginning your installation for further guidance.

F. OPTIONAL FILLING

After the installation is complete, cover and protect the floor to prevent any damage during the rest of the construction process. Do not use scotch tape, duct tape or similar adhesives directly on the flooring, as they can damage the surface.

Recommendation on filling gaps:
OscarOno flooring is intentionally designed with gaps as part of its aesthetic and structural integrity.
We generally do not recommend filling these gaps, as improper filling can negatively impact the floor's performance and appearance.

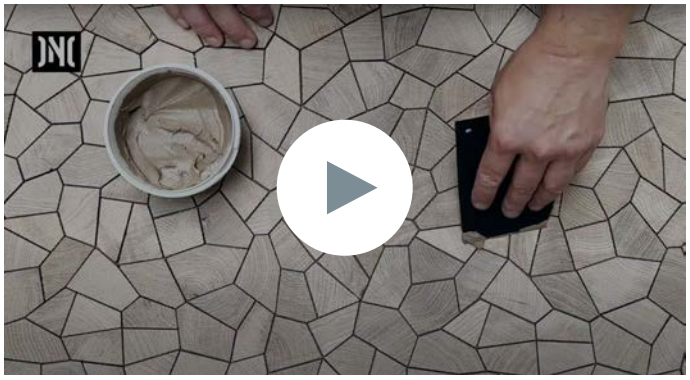

Assistance with filling:
If you choose to fill the gaps, OscarOno offers an instructional video to guide you through the proper filling process.

You can access the professional video tutorial here:

Professional Video Tutorial

Disclaimer: OscarOno **waives all responsibility and liability** for any issues arising from gap filling. If you choose to fill the gaps, you do so at your own risk, and any resulting damage or performance issues will not be covered by OscarOno.

CLEANING & MAINTENANCE

CLEANING & MAINTENANCE

Daily cleaning:

- **Vacuuming:** Clean the OscarOno floor daily by vacuuming the surface and between the gaps to remove dust and debris.
- **Spot cleaning:** For excess dirt, clean the floor with water, similar to how you would clean a regular wooden floor.
- **Cleaning solution:** Use a damp, soft microfiber cloth with a mix of water and neutral soap. Always wipe along the grain of the floor to help remove dust trapped in the grain.

Water usage:

Avoid using excessive amounts of water, as it can get trapped between the gaps and potentially cause damage. Minor spills are okay and will evaporate over time. Be aware that the gaps in the flooring allow expansion and contraction. As long as you follow the cleaning instructions, regular cleaning won't harm the floor (**1**).

Avoid harmful products:

Do not use cleaning products containing alcohol, stain removers, acetone, trichloroethylene, ammonia, bleach, or any detergents with bleach. Avoid steam cleaners and scrubber dryers as they can damage the wood (**2**).

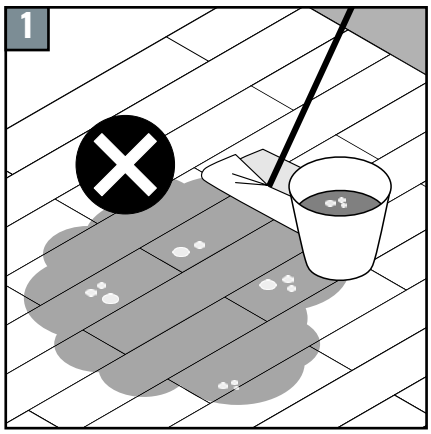

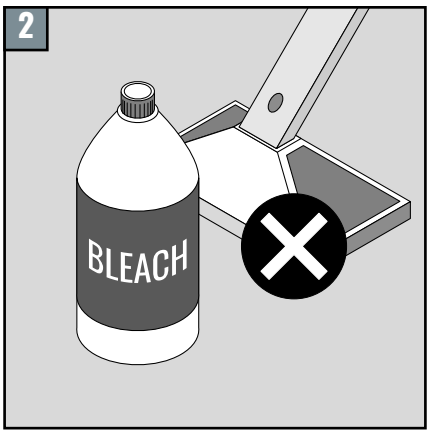

Periodic maintenance:

- **Frequency:** Perform an extensive cleaning and visual check of the floor at least once a year.
- **Restoration products:** If you notice signs of wear, use a maintenance product like Sayerlack LINEA BLU (product code: HH8012/00) or an equivalent product such as "Bona Freshen Up."
- **Application:** Apply with an applicator pad or suitable mop. This will help restore the appearance of scratched or dull surfaces and provide continued protection against wear.
- **Drying Time:** Allow the floor to dry for approximately 2 hours after applying these products.

SCRATCHES AND DAMAGED PIECES

Replacing damaged pieces:
Over time, some floor pieces may get scratched or damaged. Skilled professionals can replace these damaged pieces.

For a step-by-step guide on how to replace damaged pieces, you can watch this professional video tutorial:

Professional Video Tutorial

Repairing excessive wear and tear:
If the floor shows significant wear and tear, you can repair it by sanding the floor and reapplying a finish. This process can restore the appearance of the floor and protect it from further damage.

Finish recommendations:
We do not recommend using a urethane finish on Oscarono materials

QUESTIONS AND CONCERNS

Contact us:
If you have any questions or concerns before, during, or after installation and maintenance, please contact us. We are here to help and provide support.

Technical support:
For technical assistance, you can reach out to us via phone or email. We will be happy to assist you with any issues or queries you may have.

Responsibility:
Please note that OscarOno Paris is not responsible for the results of installations carried out by third parties. Ensure that you follow the provided guidelines to achieve the best results.

Specifications:
OscarOno Paris reserves the right to change product specifications without prior notice.

25 YEAR WARRANTY

25 YEAR WARRANTY

Warranty coverage:
OscarOno provides a 25-year warranty from the date of delivery for our engineered planks used on walls and floors. This warranty ensures that the planks are free from structural defects that would make them unsuitable for their intended use.

Our obligations:

During the warranty period, our sole responsibility is to address any defects by choosing one of the following options:

- Repairing the defective planks
- Replacing the defective planks
- Refunding a portion of the purchase price
- Providing a credit toward future purchases

Exclusions and voiding of warranty:

The warranty does not apply in cases of:

- Negligence or abuse
- Abnormal usage or misuse
- Accidents
- Improper installation or maintenance
- Conditions beyond the control of OscarOno, including but not limited to, job site conditions

This warranty ensures that your OscarOno flooring will be supported for a decade, provided that it is used and maintained according to the guidelines.

DOCUMENTS FOR CONTROL AGENCIES

OSCARONO
PARIS

CE

CERTIFICATE OF CONFORMITY
N° 181111-1EN

Product identification name: COLLECTION QUBES
Product application: Technical wood flooring elements following EN 13489
Certificate Holder: OscarOno Paris
Manufacturer OscarOno Paris
Applicable standard: EN 14342:2013
Date of issuance: August 2022

ESSENTIAL CARACTERISTICS	PERFORMANCES	ASSOCIATED TECHNICAL DOCUMENTATION AND/OR SPECIFIC TECHNICAL DOCUMENTATION
Reaction to fire:	CFL-S1	EN 13501
Characteristics enabling the classification: - Average minimum mass volume (Kg/m3) - Minimal thickness (mm) - Conditions of application:	Glued on subfloor	EN 14342 : 2013
Formaldehyde emission	E1	EN 717-1
Level of pentachlorophénol	PCP ≤ 5 ppm	-
Official usage class	34	NF EN 685
Emission other dangerous substances: - Emission COV - Emission CMR 1&2	Class A+ < 1µg/m3	ISO 16000
Thermal conductivity (W/m.K)	0,14	EN 14342 / Chapter 4.7
Thermal resistance (m2.K/W)	0,092	EN 14342 / Chapter 4.7
Biologic durability	Risk classification 1	EN 335

The performances of the product identified above are conform the declared performances. Following the EU rules n° 305/2011, the present declaration is established under the responsibility of the mentioned manufacturer declared above.
Signed for the manufacturer: Alwin Van de Ven - Director of the technical office OscarOno in Paris

PARIS, 31 August 2022
ALWIN VAN DE VEN

DESIGNED BY RAPHAEL NAVOT

Raphael Navot has graduated from the Design Academy Eindhoven and is an independent multidisciplinary, non-industrial designer who lives and works in Paris.

WWW.RAPHAELNAVOT.COM

Jular

www.jular.pt

Porto • Azambuja • Lisboa • Albufeira

made@oscarono.fr
oscarono.fr

PEFC FSC